Simpson

INSTRUMENTS THAT STAY ACCURATE

OPERATOR'S MANUAL

MODEL 380
WAVEMETER - MODULATION INDICATOR

SIMPSON ELECTRIC COMPANY
5200-18 West Kinzie Street - Chicago 44, Illinois
In Canada: Bach-Simpson Ltd., London, Ontario

MODEL "380" WAVEMETER MODULATION INDICATOR

INTRODUCTION

The model 380 has been primarily designed to fill the needs of the radio amateur. As such we feel that it's multiplicity of uses will immediately make it one of the most useful items of equipment found in the average ham shack. In order not to miss out on any of the various applications of the model 380 we recommend that the following outline of uses and instructions be digested thoroughly before the unit is placed in use.

GENERAL

Each model 380 comes complete with four plug in type coils to cover the 80, 40, 20, and 10 meter bands. These coils have been hand calibrated against accurate frequency standards, and are impregnated so as to withstand continued handling. Not withstanding this, however, reasonable care should be exercised in their use, as obviously the calibration of the unit can only be as close as the coils maintain original factory set characteristics.

Additional coil forms to cover the other ham bands are available at slight extra cost.

Printed in Canada

Since the model 380 uses an extremely sensitive meter (100 UA) and because of the tapping down on the coils there is a minimum of damping imposed on the tuned circuit. Thus a maximum sharpness of selectivity is obtained, which, as a result, provides considerably above normal accuracy in frequency definition. A finely calibrated dial set against a hairline indicator provides for extreme accuracy of reading, which reading is then translated to frequency by reference to the individual coil charts provided in handy "hang up" form.

This method of frequency reading is selected as being the one most capable of giving highest accuracy, in so far as multiple scales on the necessarily compact tuning dial would cause possible confusion and detract from readability.

Each coil is so designed as to cover only the amateur bands with very slight overlap. This feature, while very desirable for maximum accuracy, does not allow possible extra uses in other applications: For example, where the transmitter is under preliminary adjustment, and may lie between bands, or where parasitic oscillations may be present at some other frequency outside the normal ham allocations.

To give this increased coverage, a switching

arrangement greatly extends the range of frequencies covered. Since extreme accuracy is not required here, only approximate calibration is given.

When used as a wave meter, coupling to even the lower powered transmitters is sufficient without need for antenna connections to the unit. When used as a field strength or pattern indicator, an antenna can be inserted in the antenna jack provided, to increase the pick-up. Proper design allows the addition of this antenna to be made with a minimum change in calibration, while for further increase in sensitivity, the push button can be depressed allowing approximately 20 times the normal value of reading to be obtained. The lower scale of the meter is calibrated in relative power output, thus allowing tuning, antenna, or other adjustments to be read directly, in percent increase of transmitted field.

The model 380 will also find wide application as a modulation indicator. Calibrated as it is directly in percent modulation, by the flip of a switch the actual modulation depth can be read at any time, and can, if desired, serve as a modulation monitor continuously. This is allowable since the meter is relatively fast in action despite its high sensitivity and

peaks of modulation are accurately indicated. Proper procedure for exact modulation measurement is outlined in a later section.

While this in general outlines the more common applications of the unit, obviously the intelligent operator will find many other uses, —standing wave ratios may be conveniently measured—and station quality can be easily checked by a pair of head phones inserted in the jacks provided. The following is a more detailed outline of actual procedure and correct method of use when employed on any of the specific applications outlined above.

WAVEMETER APPLICATIONS

When employed as a wavemeter the circuit consists basically of an accurately tuned inductance, part of the output of which is fed to the 100 microamp meter in series with a 1N34 crystal detector. Using such a highly sensitive meter in conjunction with a high series resistance materially reduces the loading on the tuned circuit; therefore, a maximum sharpness of resonance indication is the result. Increased sensitivity is available by depressing the push button, but since this increases circuit loading, best results are obtained by coupling sufficiently close to the transmitter to allow suitable deflection with normal sensitivity. As previously men-

tioned, even low power transmitters will provide plenty of deflection for this condition by simply placing the unit near the final tank coil, and orienting so that the plug in coil is in the maximum pickup position. The use of the antenna on the model 380 when making accurate frequency checks is not recommended, since some detuning, and hence error in calibration will result.

To locate the frequency of operation, place both toggles in the down position and simply rotate the dial for maximum meter deflection. This reading is translated to frequency by means of the individual coil charts provided. The position of the hands, body, etc., will not cause detuning, and thus effect the frequency indicated unless, of course, purposely placed almost on the coil itself. There may be some reduction or possible increase in induced signal, however, and for this reason it is advisable to keep the hands in the same relative position while determining maximum output from the dial. This setting should be derived by careful tuning procedure, swinging through the peak several times as in normal radio tuning. Grounding the unit to the transmitter will in most cases minimize variations of pickup, and provides a substantially higher output as well.

To take advantage of the wider band

coverage feature, the toggle marked "frequency" is thrown upwards, and in this position provides continuous coverage from approximately the lower frequency end of the amateur band in question to a point as indicated by the table in the rear of the booklet.

PARASITIC OSCILLATIONS AND HARMONICS

In either the wide or narrow band position, the unit serves as an extremely sensitive indication of the presence of parasitic or other undesirable oscillations. As the ham well knows these oscillations are power wasters, causing instability, — in some cases greatly reduced tube life, and are caused by lack of neutralizing or excessively long leads, etc.

If some stage is suspected of being parasitic it can generally be located by holding the wavemeter near the tube or inductance associated and tuned through various ranges, watching meanwhile for any meter reading which might occur. When used in this application the extra sensitivity afforded by the meter sensitivity switch will be of considerable advantage. By detecting, and then localizing in approximate frequency, the spurious oscillation will be considerably easier to cure by any of the usual methods.

Since parasitics many times exist without

the operator being aware of them, the above procedure is well worth carrying out, regardless whether the circuit is suspected or not.

FIELD STRENGTH INDICATION

As a field strength indicator or for antenna pattern measurements the extra sensitivity afforded by depressing the push button will again be found very valuable and, since sharpness of tuning is not essential in this application, no undesirable side effects result. The antenna can be inserted in the jack on the lower right corner of the meter proper, which greatly increases the sensitivity of the unit and causes a minimum of detuning as previously indicated. Should even more sensitivity be required, however, the antenna may be clipped to the centre or lower terminals of the coil itself; even a long wire antenna may be attached temporarily.

In measuring transmitting antenna patterns, especially at the higher frequencies, polarization of the radiation will have to be considered if maximum sensitivity is desired. It may be useful, therefore, under certain circumstances, to orient the antenna in various planes until a maximum output is indicated.

From this point procedure can follow several methods. In the case of the increasingly popular rotary or fixed beam antenna, the problem of final adjustment for maximum power in a given direction is always of vital interest. For this reason the scale of the instrument has been calibrated in relative power units so that net power gains are easily recognized when obtained. This scale is designed to indicate accurately only when the push button is depressed—on the assumption that this will be the normal condition when making field measurements.

After preliminary antenna adjustments the wavemeter should be located a reasonable distance from the transmitter (1 wavelength or better) in the approximate centre of the beam, and then further antenna adjustments—such as spacing of reflector and directors, length, etc., can be carried out until maximum power is indicated. After these correct settings have been established, beam width can also be checked for half power points by either swinging the antenna, in the case of the rotary type, or by moving the wavemeter itself across the beam lobe, for the fixed variety.

Back to front ratios and intensity and shapes of side lobes can also be established by the above procedure, of course, affording additional

information as to the antennas' characteristics as a whole.

STANDING WAVE RATIO

A common problem associated with the foregoing antenna adjustments is that of transmission lines, and their proper matching to the antenna itself. In the case of resonant transmission lines, of course, matching is obtained by tuning the line itself, in which case it becomes part of an overall resonant loop, and high standing wave ratio, — that is, ratio of maximum RF voltage at any point on the line to minimum is characteristic.

However, in the case of non-resonant lines, the opposite applies. Here the operator wishes to keep the ratio of maximum to minimum voltage on the line at 1 or as near to that figure as possible. In this application the wavemeter serves the very useful function of indicating when proper match has been obtained, since only when this condition exists will the voltage at all points on the line be equal. To obtain this ratio of reading, it will not be necessary to slide the wavemeter along the full length of transmission line wherever the line is more than two or three wavelengths long. Passing from minimum to maximum on even one wavelength along the line with the wave-

meter tuned to resonance will generally give sufficient information to indicate when the matching adjustments (fanning out of feeders, settings of stubs or quarter wave transformers etc.) have produced the best results. Properly matched conditions, of course, indicate a further increase of power transfer efficiency, and should show up as an increase in field strength, if properly carried out.

For that reason further field strength checks should be instigated after any transmission line adjustments have been attempted.

QUALITY MONITORING

As a check on quality or even for remote control use, the 380 will find considerable favour. Simply plug a pair of reasonably high impedance head phones in the tip jacks provided, and quality checks can be carried out simply and efficiently. While the shunting of the meter is negligible normally, in the push button depressed position there will, of course, be a noticeable drop in headset volume. Conversely —there will be a considerable reduction in meter reading with the head sets inserted—for the same reason.

MODULATION INDICATION

In this application the meter reads per-

centage of modulation directly on the scale provided, this being accomplished by comparing the rectified modulation component with the rectified unmodulated carrier alone. Because the load on the circuit changes in accomplishing this, for accurate results this measurement is best carried out without a coil plugged in. The unit then functions as a non-resonant device, and the dial tuning control serves as a fine attenuator adjustment, giving vernier control of power input to the meter.

As the pickup and circuit efficiency is reduced by the removal of the coil, it will be necessary to provide the required signal to the unit by means of a lead plugged into the antenna post and then loosely coupled to the final tank coil. In most cases a turn or two looped around the feeders is sufficient to give this required pickup, but for low power conditions it may be necessary to employ a small link coupling to the final tank coil. Again, to minimize variations in reading and to increase the pickup, the unit should be grounded to the transmitter, either directly through the case, or by a grounding lead, inserted in the upper side jack.

The fact that the model 380 functions as a non-resonant circuit on modulation indication

will be found most convenient where multi-band operation is desired or is actually in use.

If the transmitter is switched to a new band, the only adjustment required to the modulation indicator will be that of adjusting for exact power input. The actual coupling to the unit will probably not need re-adjusting with change of band, unless, of course, a major power change takes place as well. Procedure is as follows:

Set the attenuator (tuning) control at mid scale and couple, as outlined above, to the transmitter, so as to bring the pointer to approximately 100% on the dial (modulation toggle switch down). Now using the dial scale as exact vernier control, bring the steady unmodulated value of R.F. as indicated by the meter to exactly 100%. The modulation toggle is then thrown to the "up" position and the meter will read the percentage of modulation when applied directly. If no modulation is applied, of course, there should be no reading.

CAUTION: Do not depress the push button switch when using the unit as a modulation indicator as this will render the readings obtained meaningless.

It should be pointed out that this instrument, like all types of rectifier instrument, and there-

fore all modulation indicators except the CRO, reads the correct scale value only when measuring pure sine wave or tone modulation, and of constant amplitude. However, as mentioned previously, the meter is sufficiently hi-speed to follow voice variations with minimum error, and while variations of wave form from the sinusoidal are inevitable, the total error encountered is quite acceptable.

For those operators who want to establish exact values of modulation, we recommend the production of a 400 cycle oscillator with sufficient output to operate a loud speaker at normal voice level. Overall modulation from microphone to output can then be established exactly.

Because the 380 is designed to offer a degree of accuracy hitherto unknown in a compact, reasonably priced unit, proper care in handling the coils is emphasized so that they can maintain their original calibration.

It is advisable to insert or withdraw the coils with the thumb and forefinger clamped against the ends of the coil, so that no actual handling of the wire proper takes place. A proper storage container for the unused coils is also recommended. Frequency coverage for the

various frequency extended positions of the toggle are as follows:

Band	A (80 M.)	2.6	to	3.8	megacycles
	B (40 M.)	4.8	to	7.0	"
	C (20 M.)	9.5	to	14.0	"
	D (10 M.)	20.5	to	28.0	"

Should coil data be required to fill in the above gaps, thus allowing continuous frequency coverage, this information can be obtained by writing direct to us at the factory.

While coils are supplied for the four popular bands, hand calibrated, the usefulness of the 380 by no means ends with those frequencies. A fifth coil covering the 6 meter band is also available, and while not supplied with the unit, can be obtained at slight extra cost for those who wish to use this band.

At higher frequencies still, the transmitter can be located approximately by the use of a quarter wave length section of antenna. The functions of modulation, field strength and field pattern are, of course, still available at those frequencies as well.

WARNING

1. The calibration of the unit can easily be altered by removal from the case, even though the wiring is not intentionally disturbed.

2. The crystal detector, while extremely rugged, will not stand indefinite overload. Make sure the 380 is not subjected to intense R.F. fields, or that it accidentally comes in contact with high D.C. voltage. Burn out, or loss of calibration, will be the result.

MODEL "380" WAVEMETER

MODULATION INDICATOR

CIRCUIT DIAGRAM

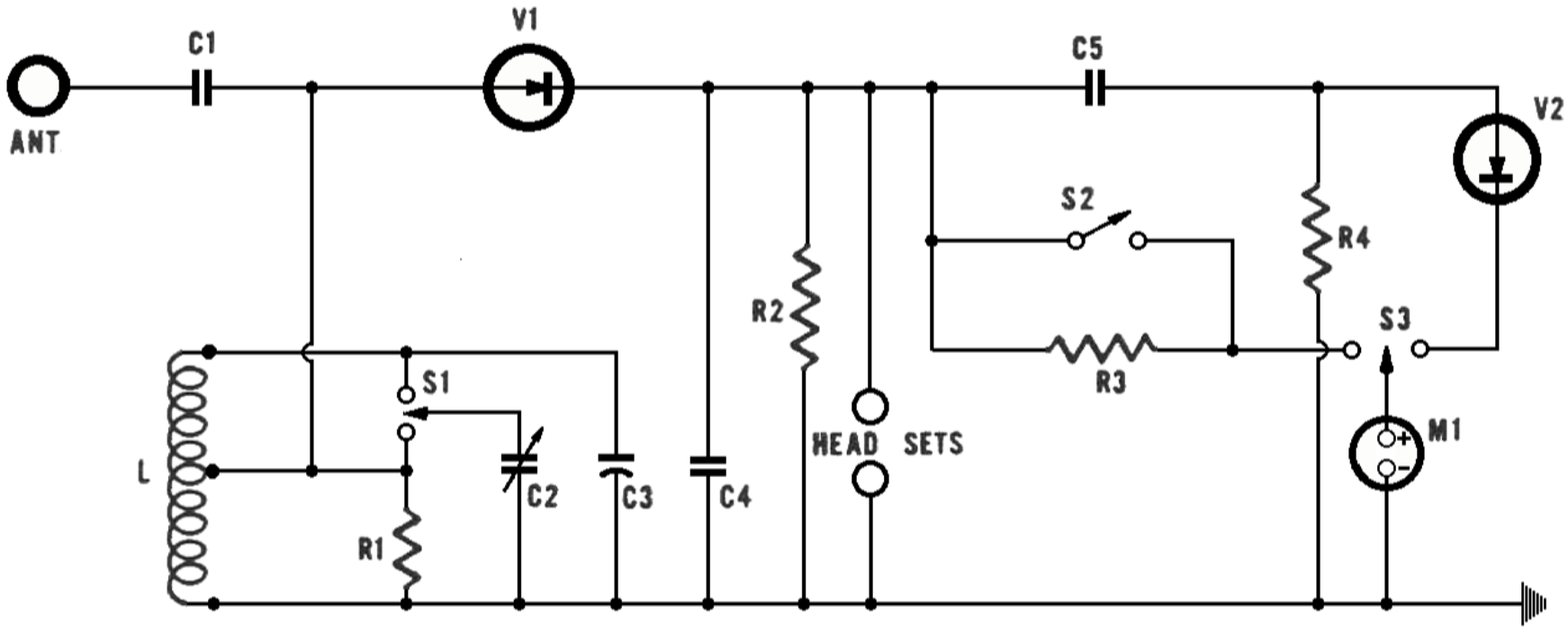

CIRCUIT DIAGRAM

PARTS LIST

C1 — 10 MMFD.
C2 — 5—75 MMFD.
C3 — 7—45 MMFD.
C4 — .0068 MFD.
C5 — .25 MFD.

R1 — 12,000 OHMS
R2 — 20,000 OHMS
R3 — MATCHED PAIR
R4 — 10,000 OHMS
M1 — 100 MICROAMP METER (SIMPSON)
L — PLUG—IN INDUCTANCE

V1 — 1N34 DIODE
V2 — COPPER OXIDE RECTIFIER
S1 — FREQUENCY RANGE SWITCH
S2 — PUSH—BUTTON SWITCH
S3 — MODULATION SWITCH

MODEL "77" WAVEMETER

DIAL CALIBRATION

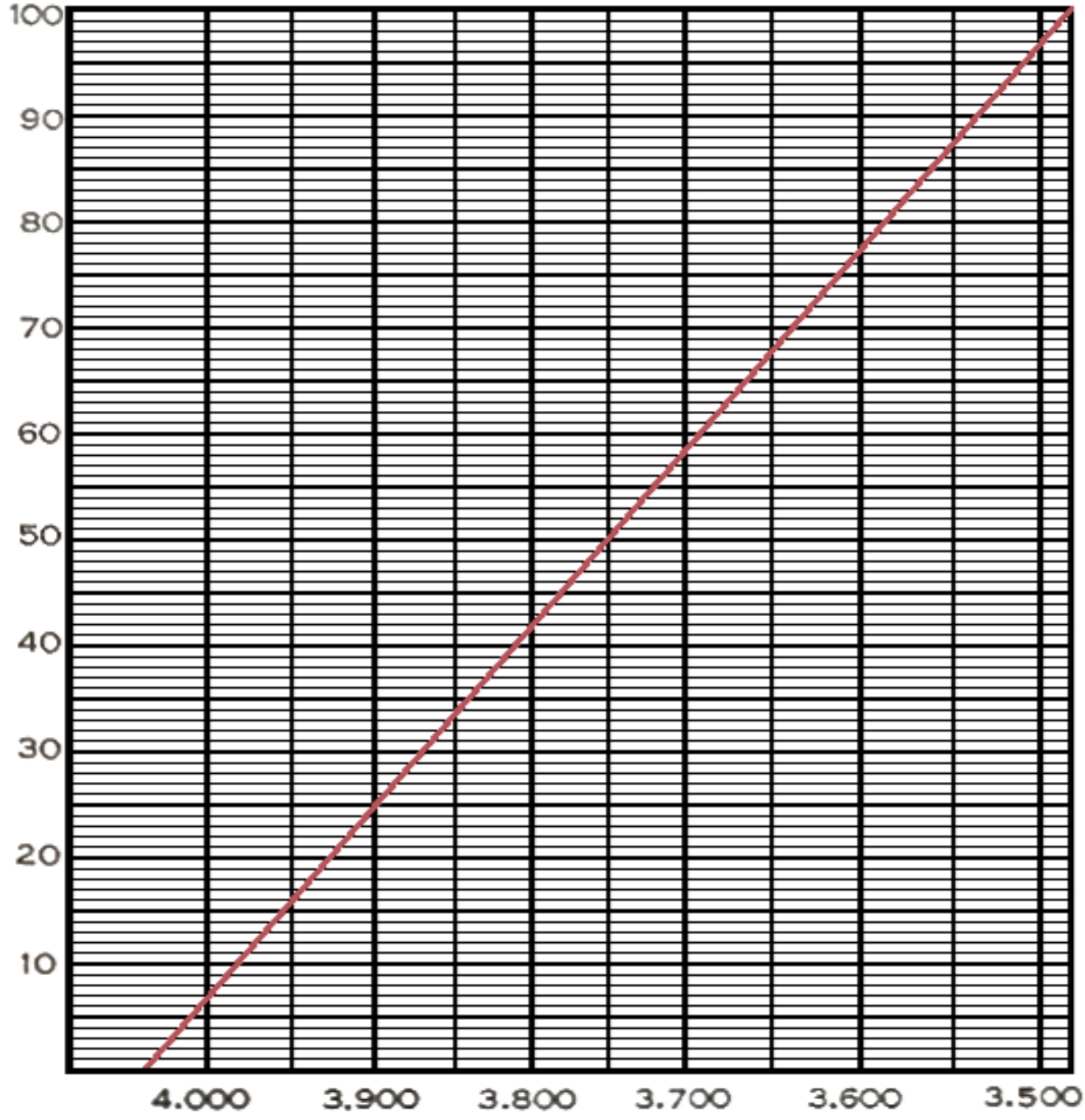

BAND: 3.5 TO 4.0 MEGACYCLES

CAL. _____ SER. NO. _____ CK. _____

NOTE—CURVE INDICATES CALCULATED VALUE ONLY.
• INDICATES ACTUAL.

MODEL "77" WAVEMETER

DIAL CALIBRATION

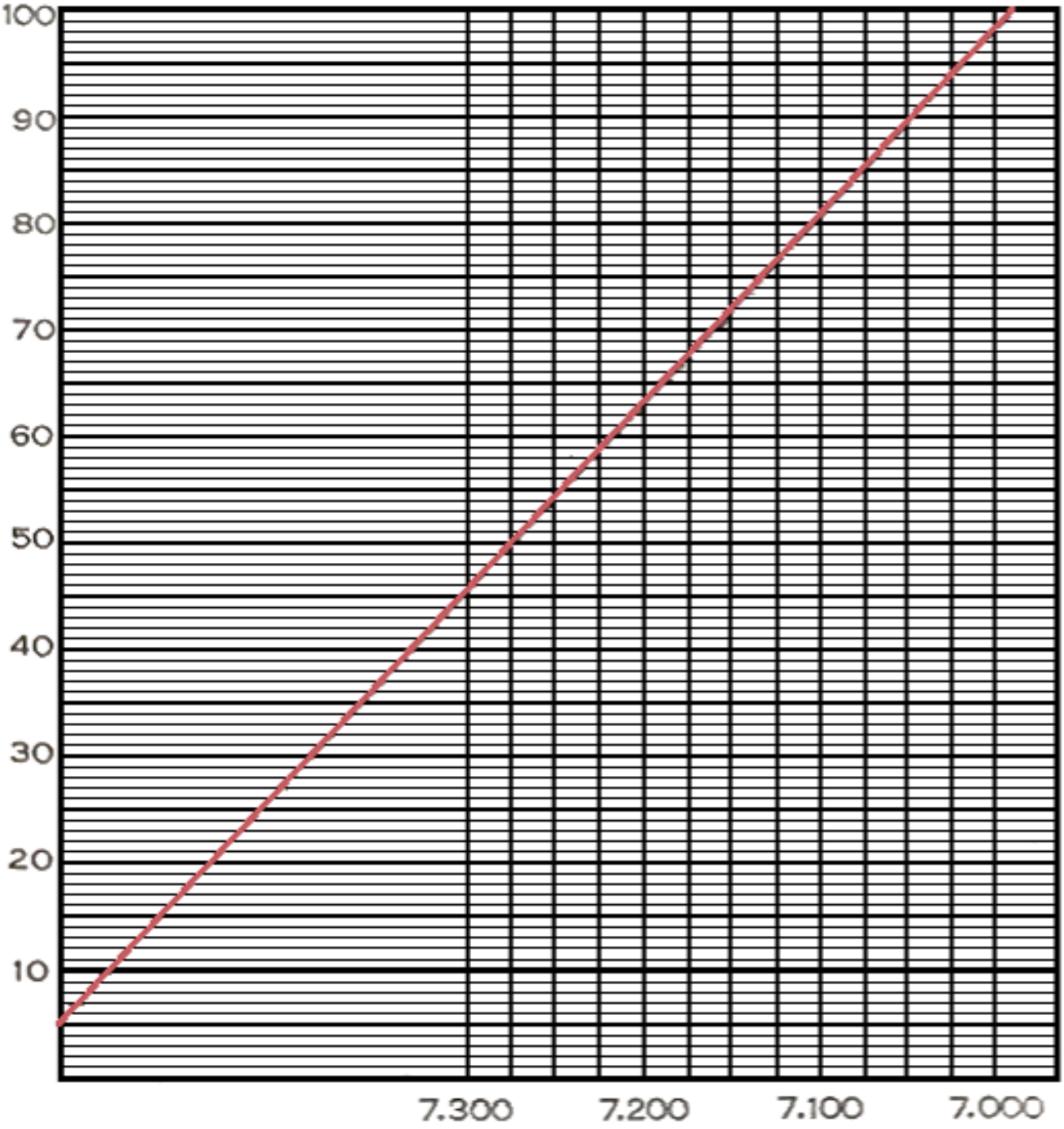

BAND: 7.0 TO 7.3 MEGACYCLES

CAL. _____ SER. NO. _____ CK. _____

NOTE—CURVE INDICATES CALCULATED VALUE ONLY.
◆ INDICATES ACTUAL.

MODEL "77" WAVEMETER

DIAL CALIBRATION

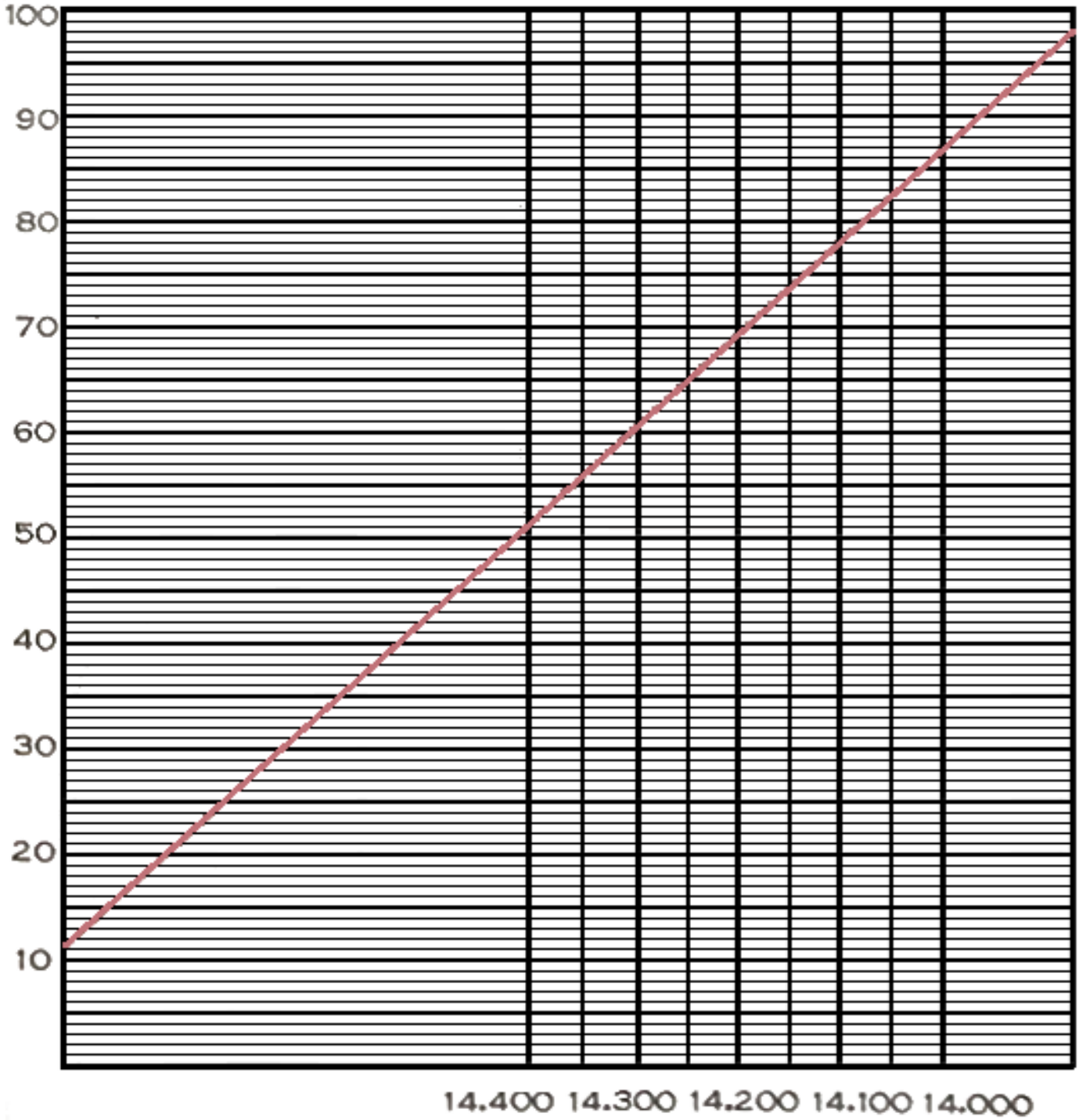

BAND: 14.0 TO 14.4

MEGACYCLES

CAL. _____ SER. NO. _____ CK. _____

NOTE—CURVE INDICATES CALCULATED VALUE ONLY.
• INDICATES ACTUAL.

MODEL "77" WAVEMETER

DIAL CALIBRATION

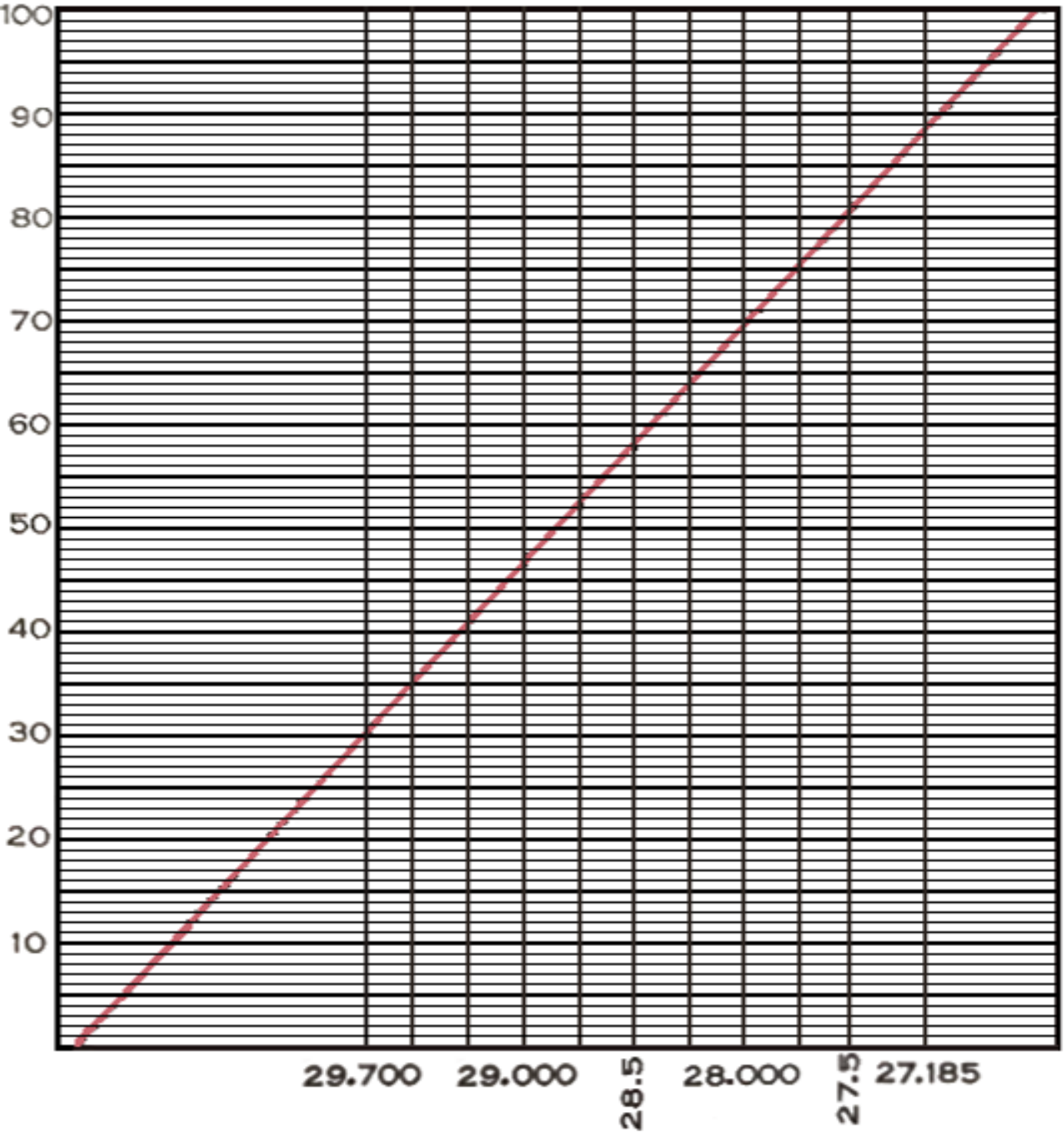

BAND: 27.185 TO 29.700

MEGACYCLES

CAL. _____ SER. NO. _____ CK. _____

NOTE—CURVE INDICATES CALCULATED VALUE ONLY.
• INDICATES ACTUAL.